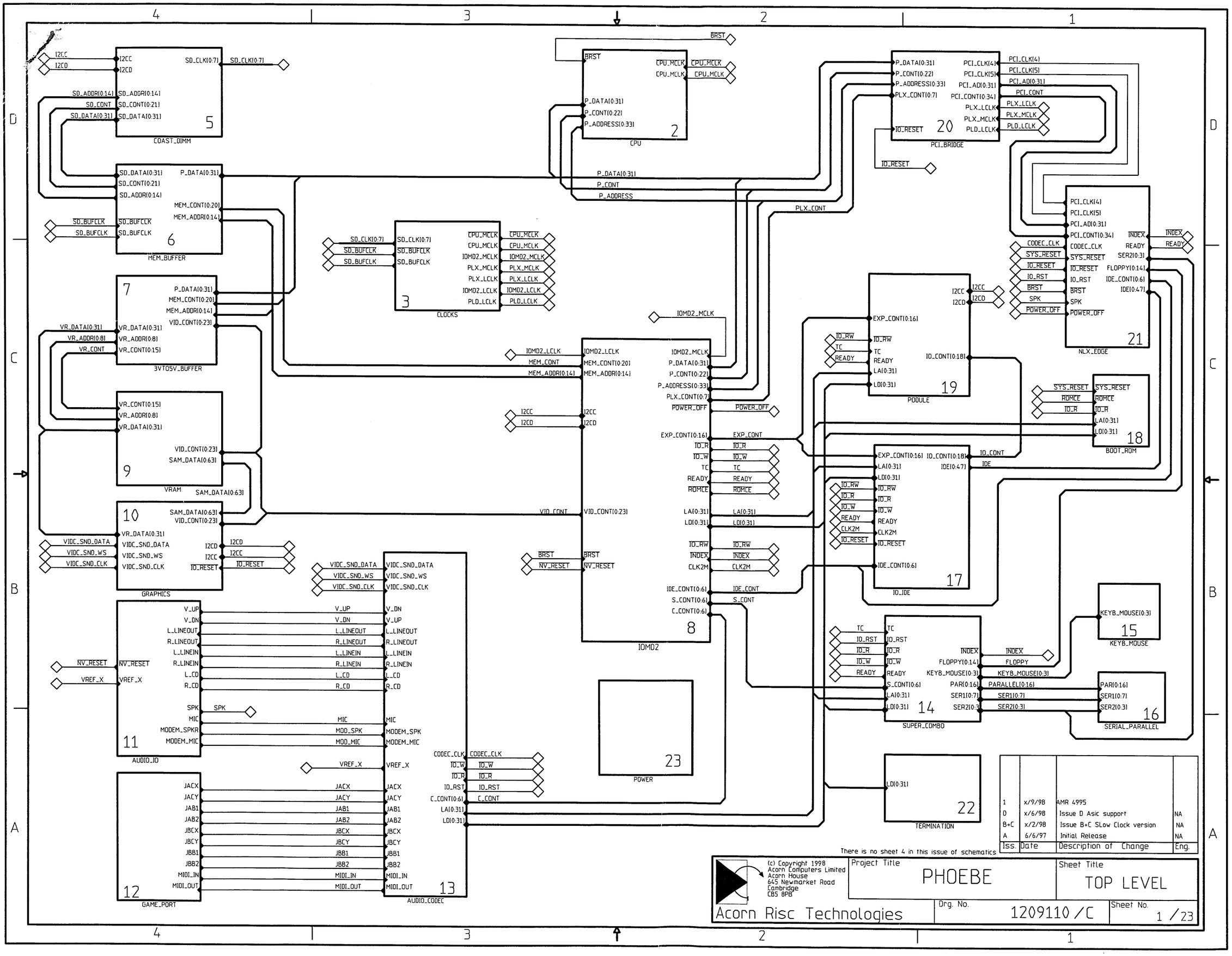

Iss.	Date	Description of Change	Eng.
1	x/9/98	AMR 4995	
D	x/6/98	Issue D Asic support	NA
B+C	x/2/98	Issue B+C SLow Clock version	NA
A	6/6/97	Initial Release	NA

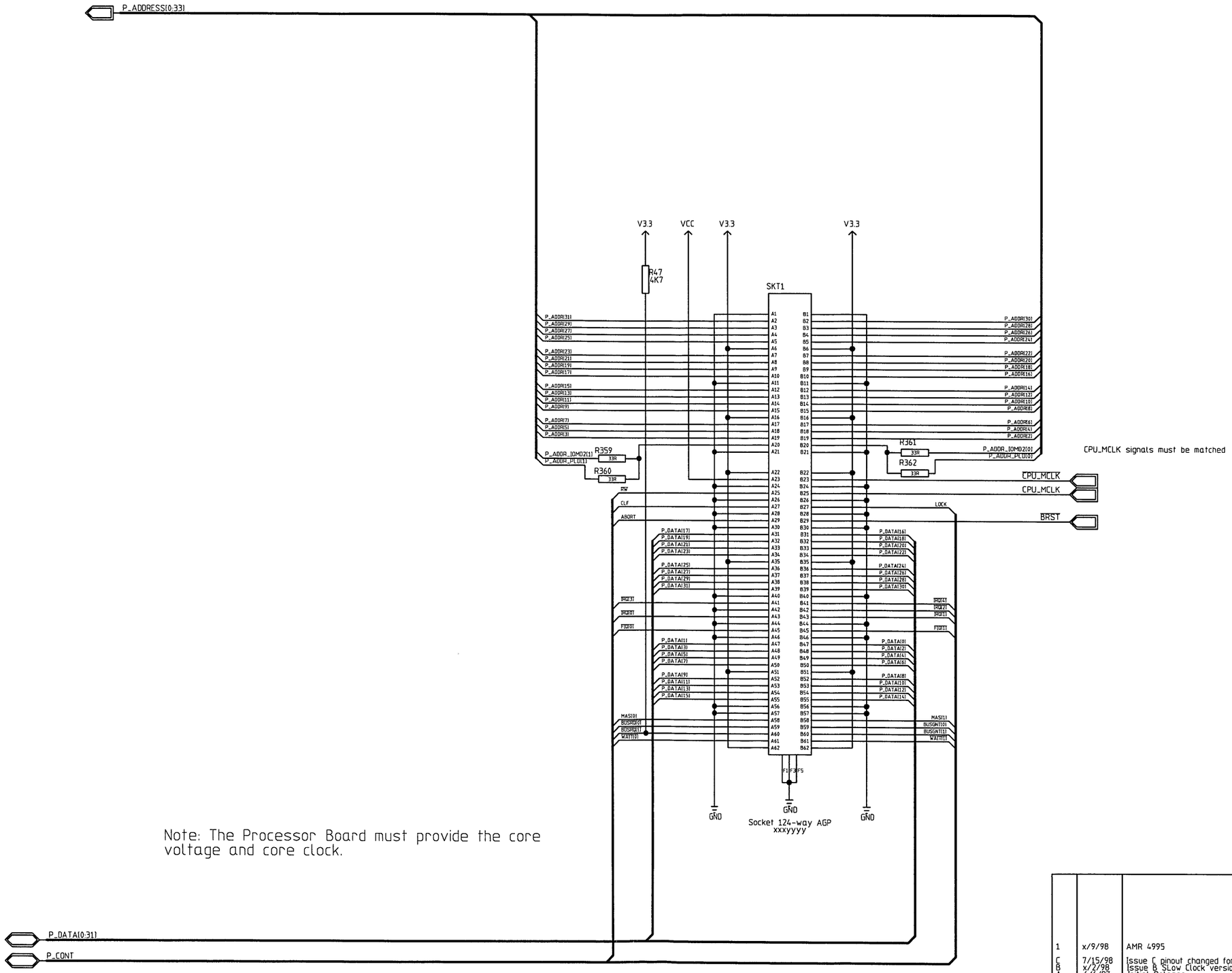

CPU_MCLK signals must be matched

Note: The Processor Board must provide the core voltage and core clock.

Iss.	Date	Description of Change	Eng.
1	x/9/98	AMR 4995	
C	7/15/98	Issue C pinout changed for layout	RS
B	x/2/98	Issue B SLow Clock version	NA
A	6/6/97	Initial Release	NA

(c) Copyright 1998
Acorn Computers Limited
Acorn House
645 Newmarket Road
Cambridge
CB5 8PB

Acorn Risc Technologies

Project Title: PHOEBE

Sheet Title: StrongARM (MAIN)

Drg. No. 1209110/C

Sheet No. 2/23

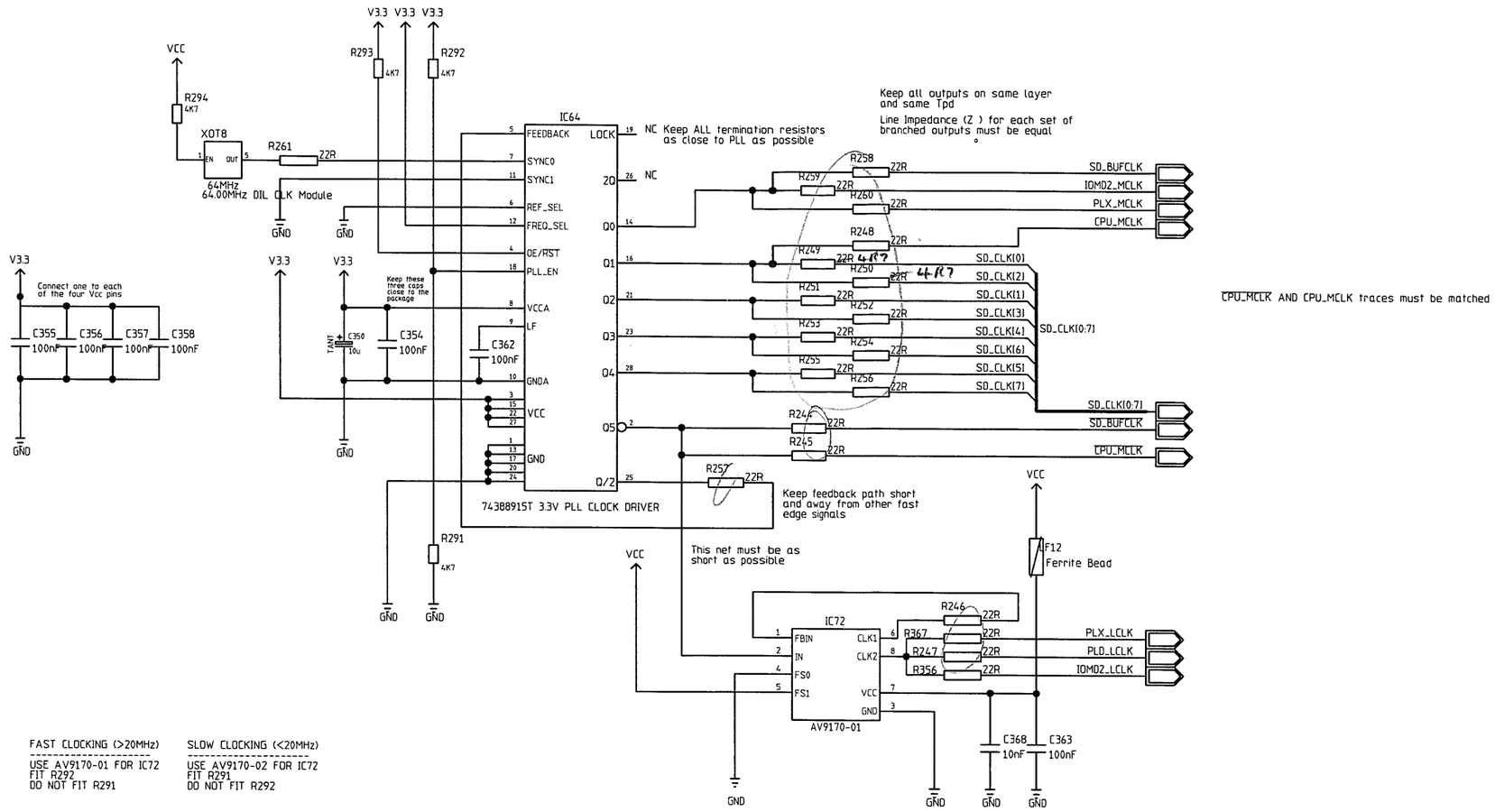

FAST CLOCKING (>20MHz)	SLOW CLOCKING (<20MHz)
USE AV9170-01 FOR IC72	USE AV9170-02 FOR IC72
FIT R292	FIT R291
DO NOT FIT R291	DO NOT FIT R292

Iss.	Date	Description of Change	Eng.
1	x/9/98	AMR 4995	
D	30/5/98	Issue D PLL Version	TC
B	x/2/98	Issue B SLow Clock version	NA

(c) Copyright 1998
Acorn Computers Limited
Acorn House
645 Newmarket Road
Cambridge
CB5 8PB

Acorn Risc Technologies

Project Title: PHOEBE

Sheet Title: Clocks

Drg. No. /C

Sheet No. 3/23

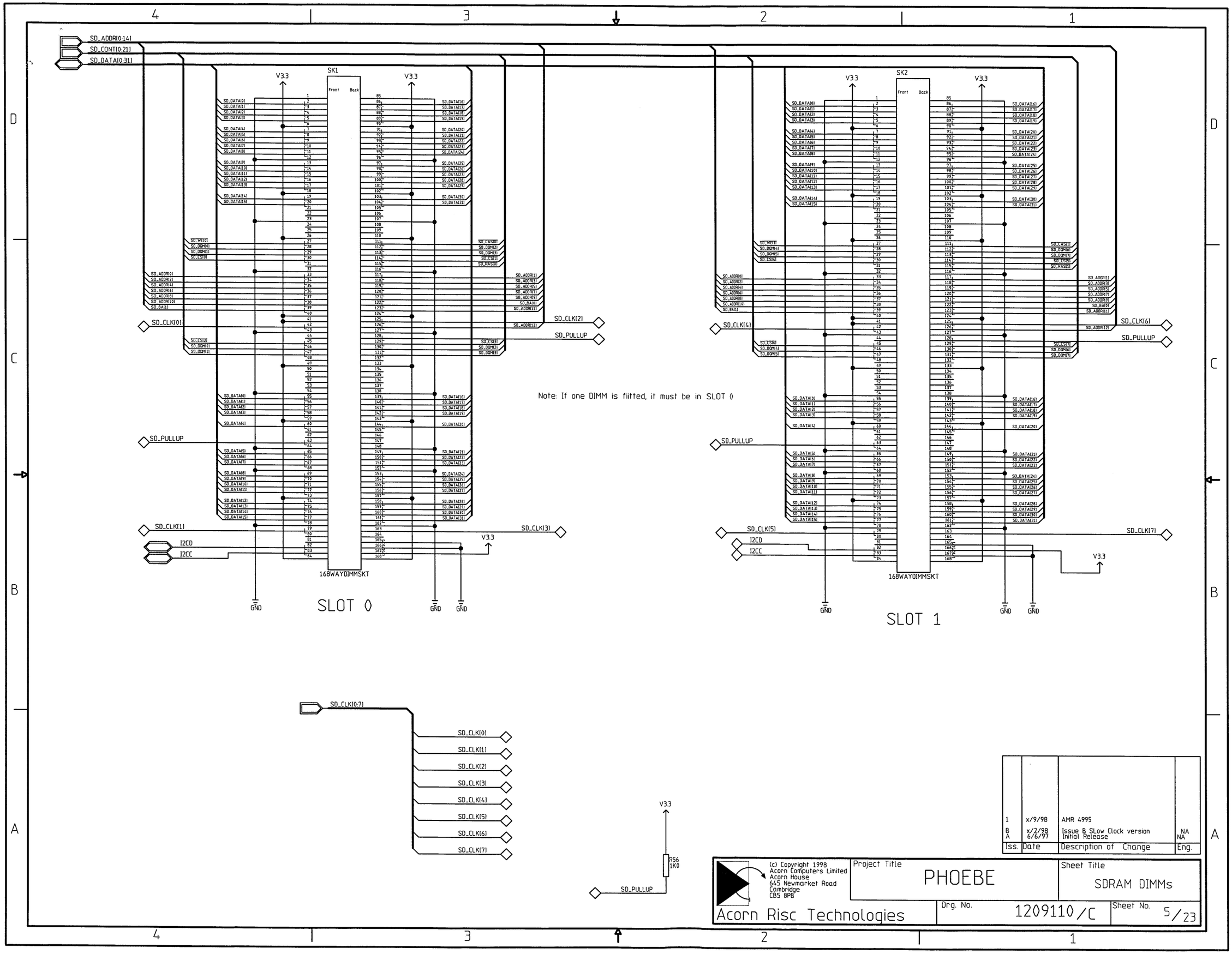

Iss.	Date	Description of Change	Eng.
1	x/9/98	AMR 4995	
B	x/2/98	Issue B SLow Clock version	NA
A	6/6/97	Initial Release	NA

(c) Copyright 1998
Acorn Computers Limited
Acorn House
645 Newmarket Road
Cambridge
CB5 8PB

Acorn Risc Technologies

Project Title: PHOEBE

Sheet Title: SDRAM DIMMs

Drg. No. 1209110/C

Sheet No. 5/23

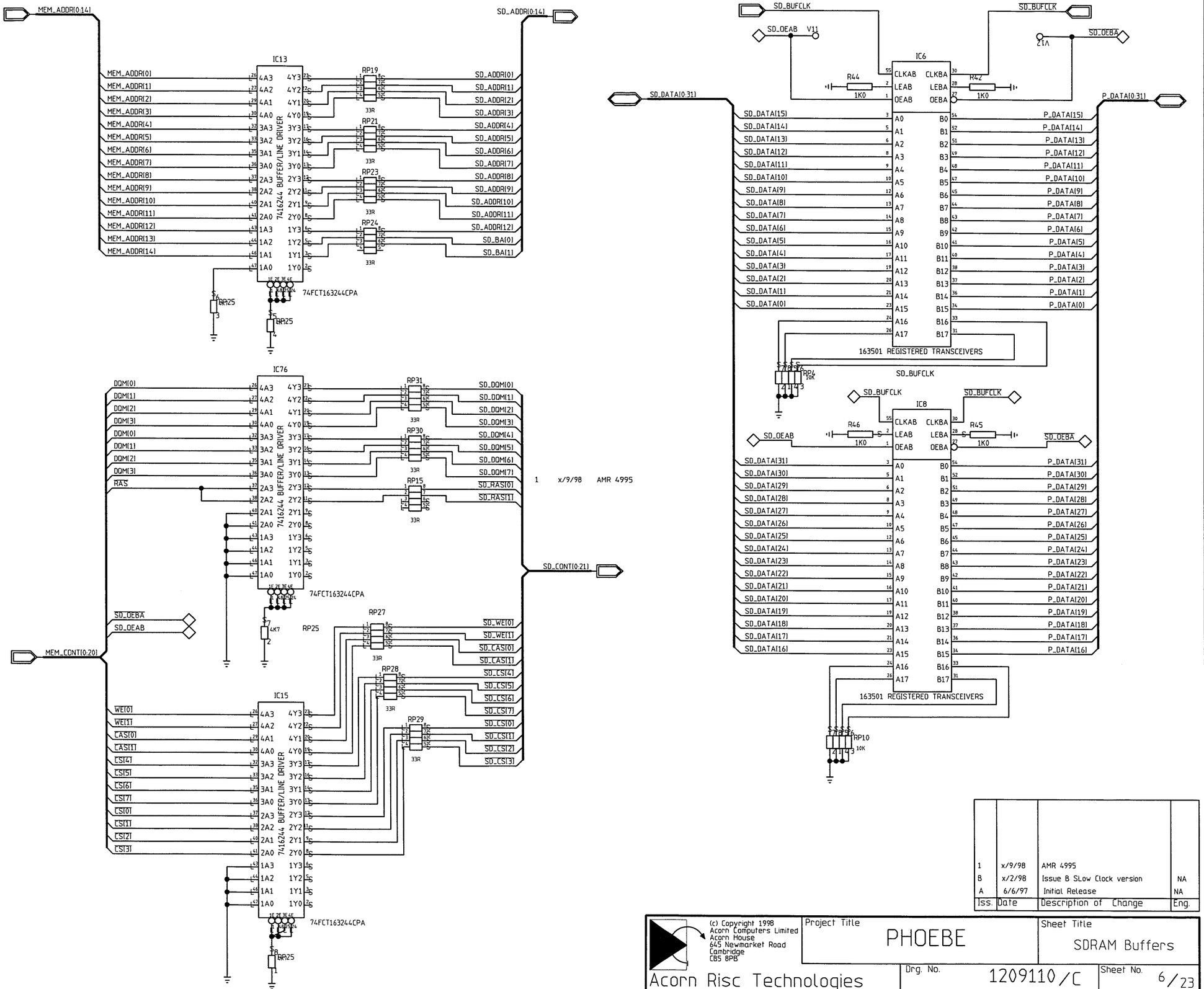
MEM_ADDR(0:14)
SD_ADDR(0:14)
IC13
7416244 BUFFER/LINE DRIVER
74FCT163244CPA
RP19
RP21
RP23
RP24
33R
RR25
SD_BA(0)
SD_BA(1)
IC76
RP31
RP30
RP15
SD_DQM(0)
SD_DQM(1)
SD_DQM(2)
SD_DQM(3)
SD_RAS(0)
SD_RAS(1)
SD_CONT(0:21)
SD_OEBA
SD_OEAB
MEM_CONT(0:20)
4K7
RP25
RP27
RP28
RP29
SD_WE(0)
SD_WE(1)
SD_CAS(0)
SD_CAS(1)
SD_CS(4)
SD_CS(5)
SD_CS(6)
SD_CS(7)
SD_CS(0)
SD_CS(1)
SD_CS(2)
SD_CS(3)
IC15
SD_BUFCLK
SD_DATA(0:31)
P_DATA(0:31)
IC6
IC8
CLKAB
CLKBA
LEAB
LEBA
OEAB
OEBA
R44
R42
R46
R45
1K0
163501 REGISTERED TRANSCEIVERS
RP4
10K
RP10
10K
1 x/9/98 AMR 4995
B x/2/98 Issue B SLow Clock version NA
A 6/6/97 Initial Release NA
Iss. Date Description of Change Eng.
(c) Copyright 1998
Acorn Computers Limited
Acorn House
645 Newmarket Road
Cambridge
CB5 8PB
Acorn Risc Technologies
Project Title
PHOEBE
Sheet Title
SDRAM Buffers
Drg. No.
1209110/C
Sheet No.
6/23

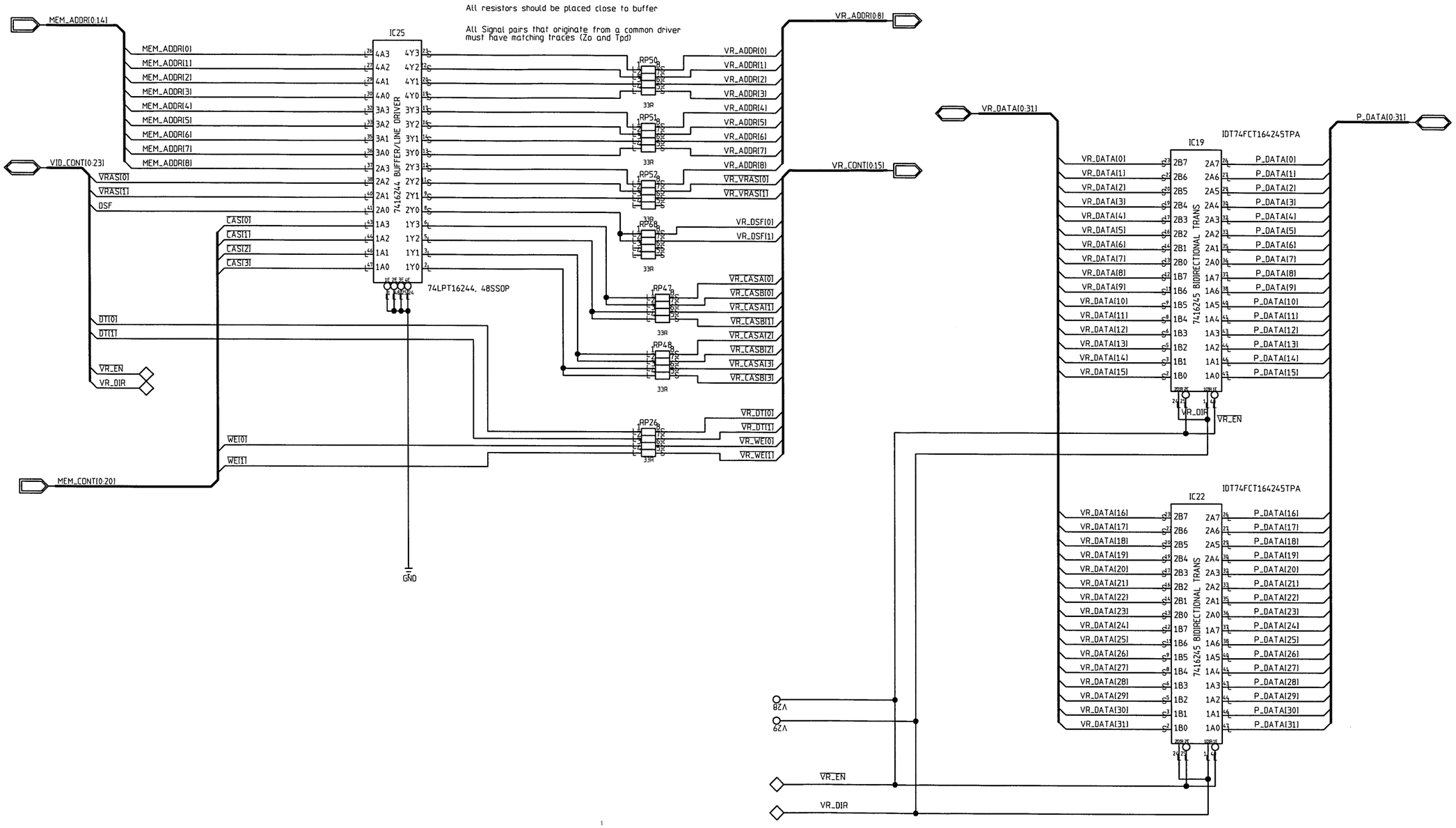

Iss	Date	Description of Change	Eng.
B	x/2/98	Issue B SLow Clock version	NA
A	6/6/97	Initial Release	NA

(c) Copyright 1998
Acorn Computers Limited
Acorn House
645 Newmarket Road
Cambridge
CB5 8PB

Acorn Risc Technologies

Project Title: PHOEBE

Sheet Title: 3.3v to 5v bus buffers

Drg. No. 1209110/C

Sheet No. 7/23

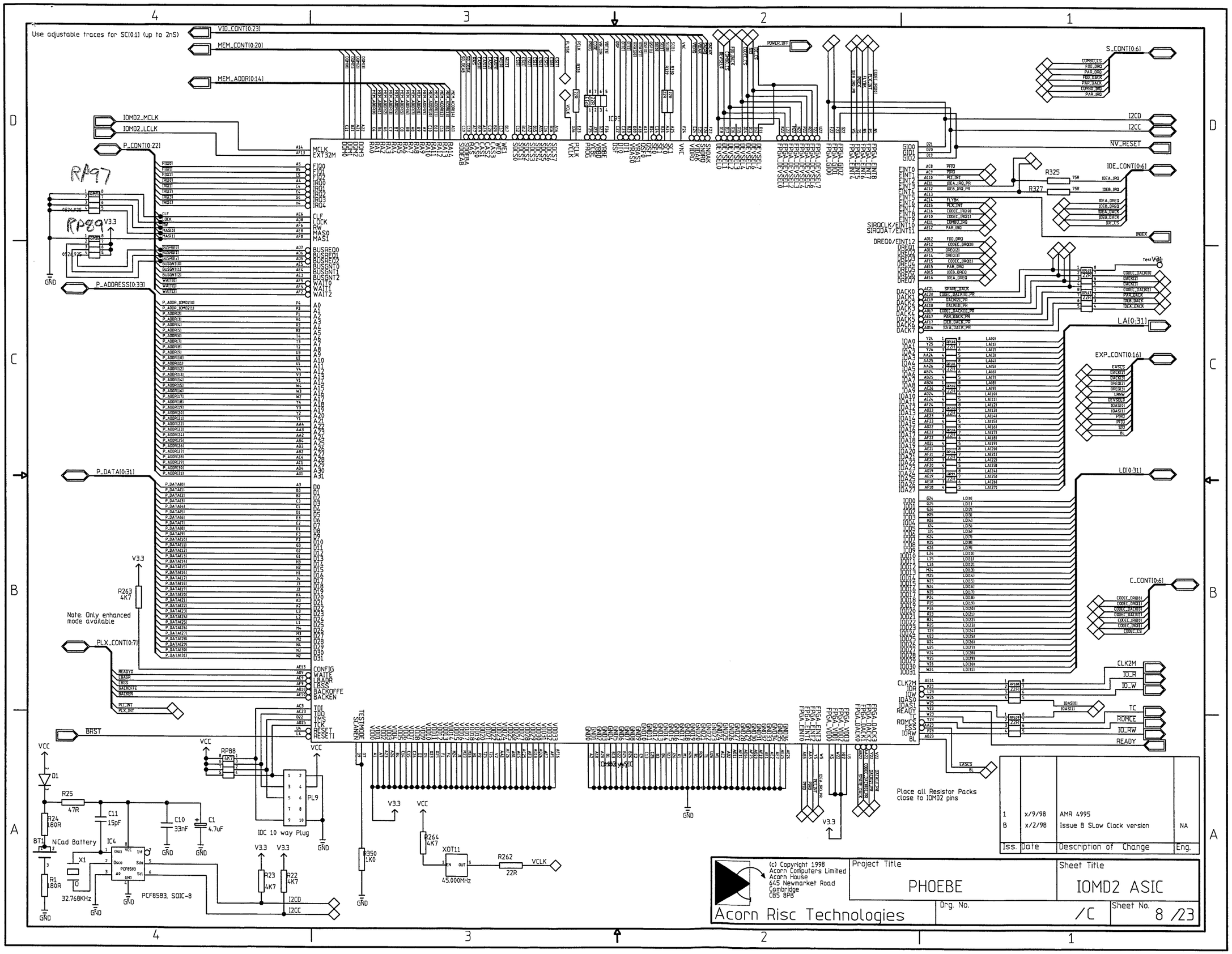
Use adjustable traces for SC(0:1) (up to 2nS)
VIO_CONT(0:23)
MEM_CONT(0:20)
MEM_ADDR(0:14)
IOMD2_MCLK
IOMD2_LCLK
P_CONT(0:22)
P_ADDRESS(0:33)
P_DATA(0:31)
PLX_CONT(0:7)
BRST
S_CONT(0:6)
I2CD
I2CC
NV_RESET
IDE_CONT(0:6)
INDEX
LA(0:31)
EXP_CONT(0:16)
LD(0:31)
C_CONT(0:6)
CLK2M
IO_R
IO_W
TC
ROMCE
IO_RW
READY
RP97
RP89
RP88
PL9
IDC 10 way Plug
NiCad Battery
BT1
X1
32.768KHz
IC4
PCF8583, SOIC-8
R263 4K7
Note: Only enhanced mode available
R350 1K0
R264 4K7
XOT11
45.000MHz
R262 22R
VCLK
R23 4K7
R22 4K7
R325 75R
R327 75R
Place all Resistor Packs close to IOMD2 pins
(c) Copyright 1998
Acorn Computers Limited
Acorn House
645 Newmarket Road
Cambridge
CB5 8PB
Acorn Risc Technologies
Project Title
PHOEBE
Sheet Title
IOMD2 ASIC
Drg. No.
/C
Sheet No.
8 /23
Iss. Date Description of Change Eng.
1 x/9/98 AMR 4995
B x/2/98 Issue B SLow Clock version NA

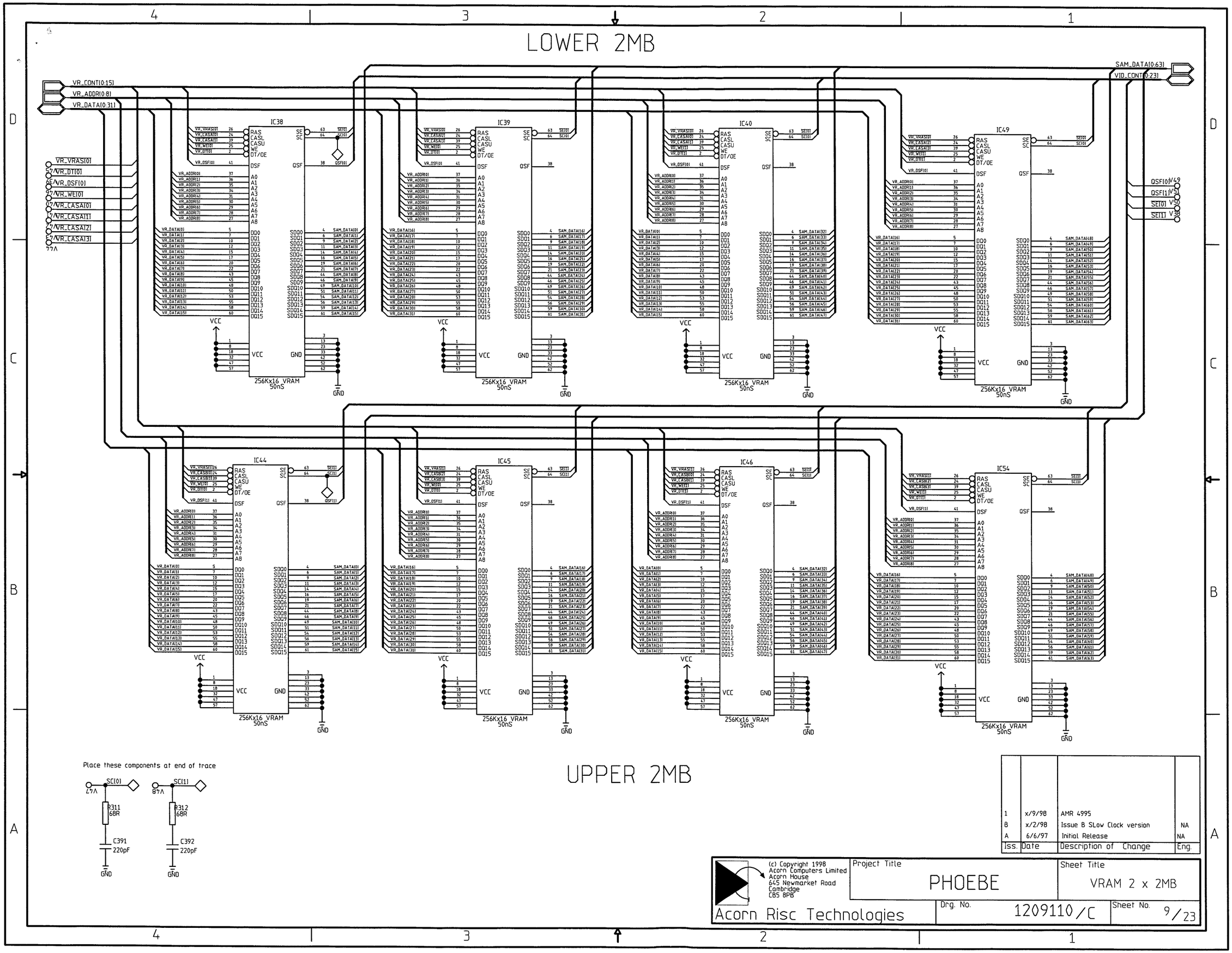

Iss.	Date	Description of Change	Eng.
1	x/9/98	AMR 4995	
B	x/2/98	Issue B SLow Clock version	NA
A	6/6/97	Initial Release	NA

(c) Copyright 1998
Acorn Computers Limited
Acorn House
645 Newmarket Road
Cambridge
CB5 8PB

Acorn Risc Technologies

Project Title: PHOEBE

Sheet Title: VRAM 2 x 2MB

Drg. No. 1209110/C

Sheet No. 9/23

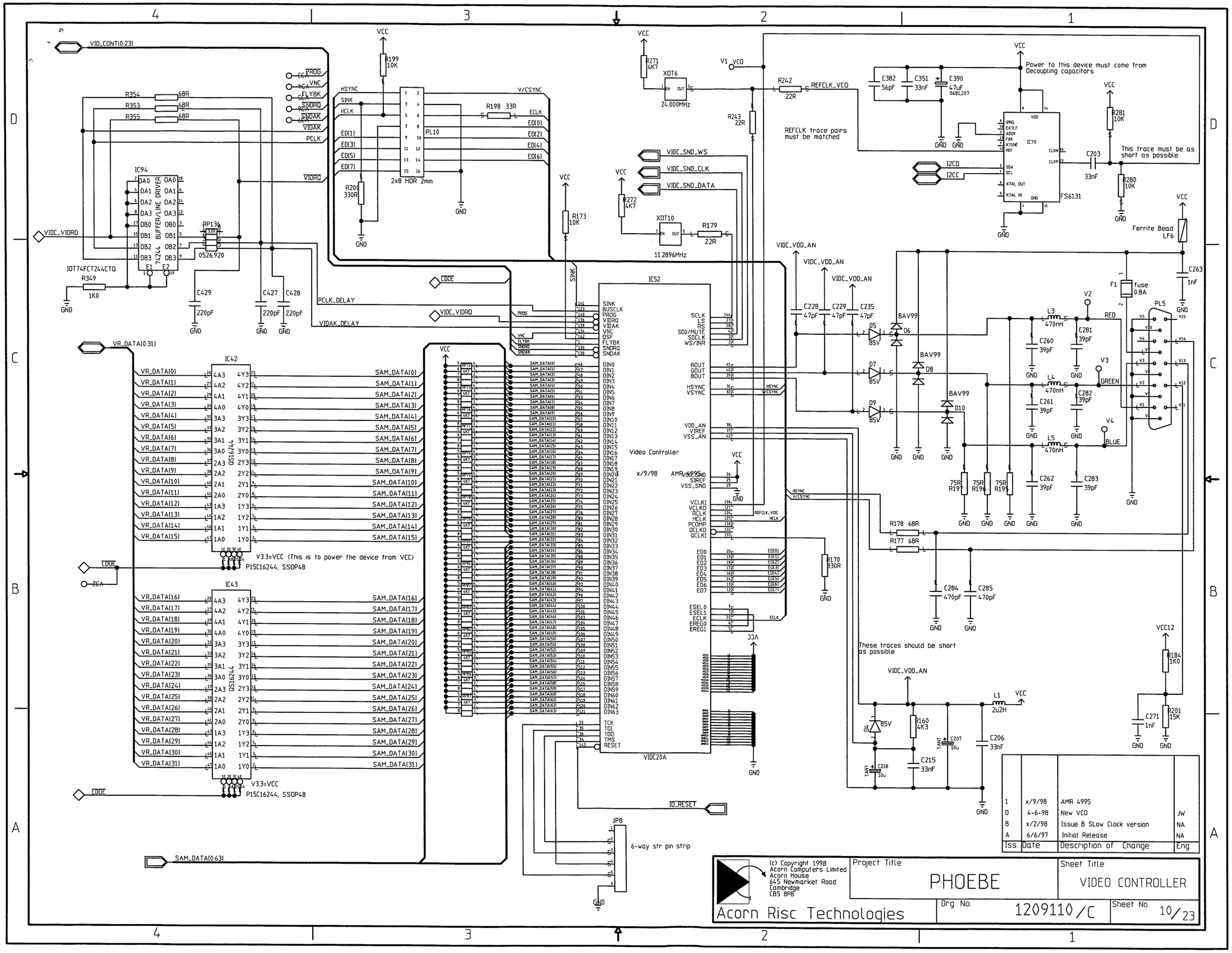
VID_CONT[0:23]
IC94
74244 BUFFER/LINE DRIVER
IDT74FCT244CTQ
IC42
OS16244
P15C16244, SSOP48
IC43
IC52
Video Controller
VIDC20A
2x8 HDR 2mm
24.000MHz
11.2896MHz
XOT6
XOT10
IC70
FS6131
Power to this device must come from Decoupling capacitors
REFCLK trace pairs must be matched
This trace must be as short as possible
Ferrite Bead LF6
fuse 0.8A
PL5
RED
GREEN
BLUE
6-way str pin strip
JP8
These traces should be short as possible
V3.3=VCC (This is to power the device from VCC)
SAM_DATA[0:63]
VR_DATA[0:31]
VIDC_VIDRQ
IO_RESET
(c) Copyright 1998
Acorn Computers Limited
Acorn House
645 Newmarket Road
Cambridge
CB5 8PB
Acorn Risc Technologies
Project Title
PHOEBE
Sheet Title
VIDEO CONTROLLER
Drg. No.
1209110/C
Sheet No.
10/23
Iss. Date Description of Change Eng.
1 x/9/98 AMR 4995
D 4-6-98 New VCO JW
B x/2/98 Issue B SLow Clock version NA
A 6/6/97 Initial Release NA

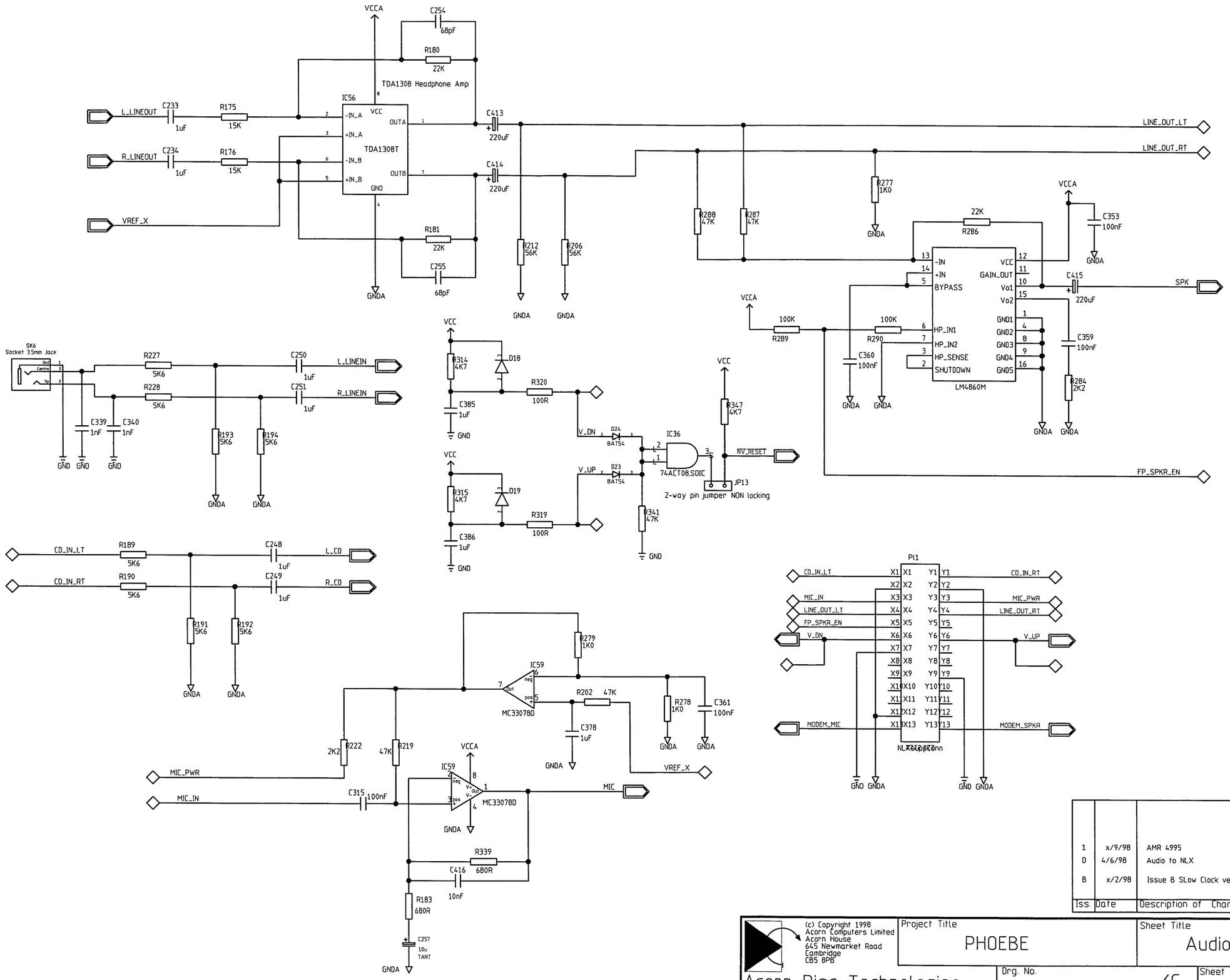

Iss.	Date	Description of Change	Eng.
1	x/9/98	AMR 4995	
D	4/6/98	Audio to NLX	TC
B	x/2/98	Issue B SLow Clock version	NA

(c) Copyright 1998
Acorn Computers Limited
Acorn House
645 Newmarket Road
Cambridge
CB5 8PB

Acorn Risc Technologies

Project Title: PHOEBE

Sheet Title: Audio

Drg. No. /C

Sheet No. 11/23

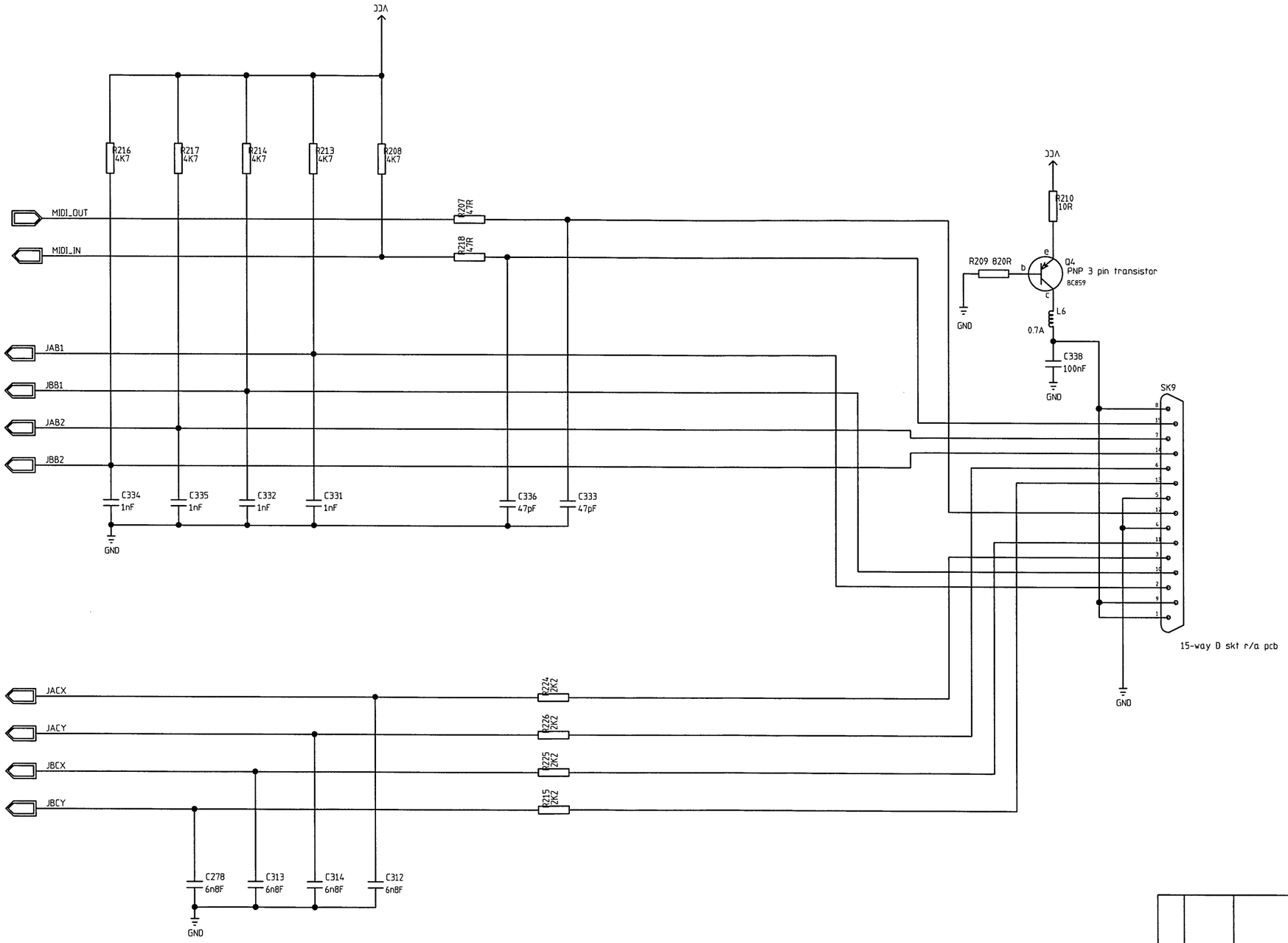

Iss.	Date	Description of Change	Eng.
1	x/9/98	AMR 4995	
B	x/2/98	Issue B SLow Clock version	NA
A	6/6/97	Initial Release	NA

(c) Copyright 1998
Acorn Computers Limited
Acorn House
645 Newmarket Road
Cambridge
CB5 8PB

Acorn Risc Technologies

Project Title: PHOEBE

Sheet Title: GAME PORT

Drg. No. 1209110/C

Sheet No. 12/23

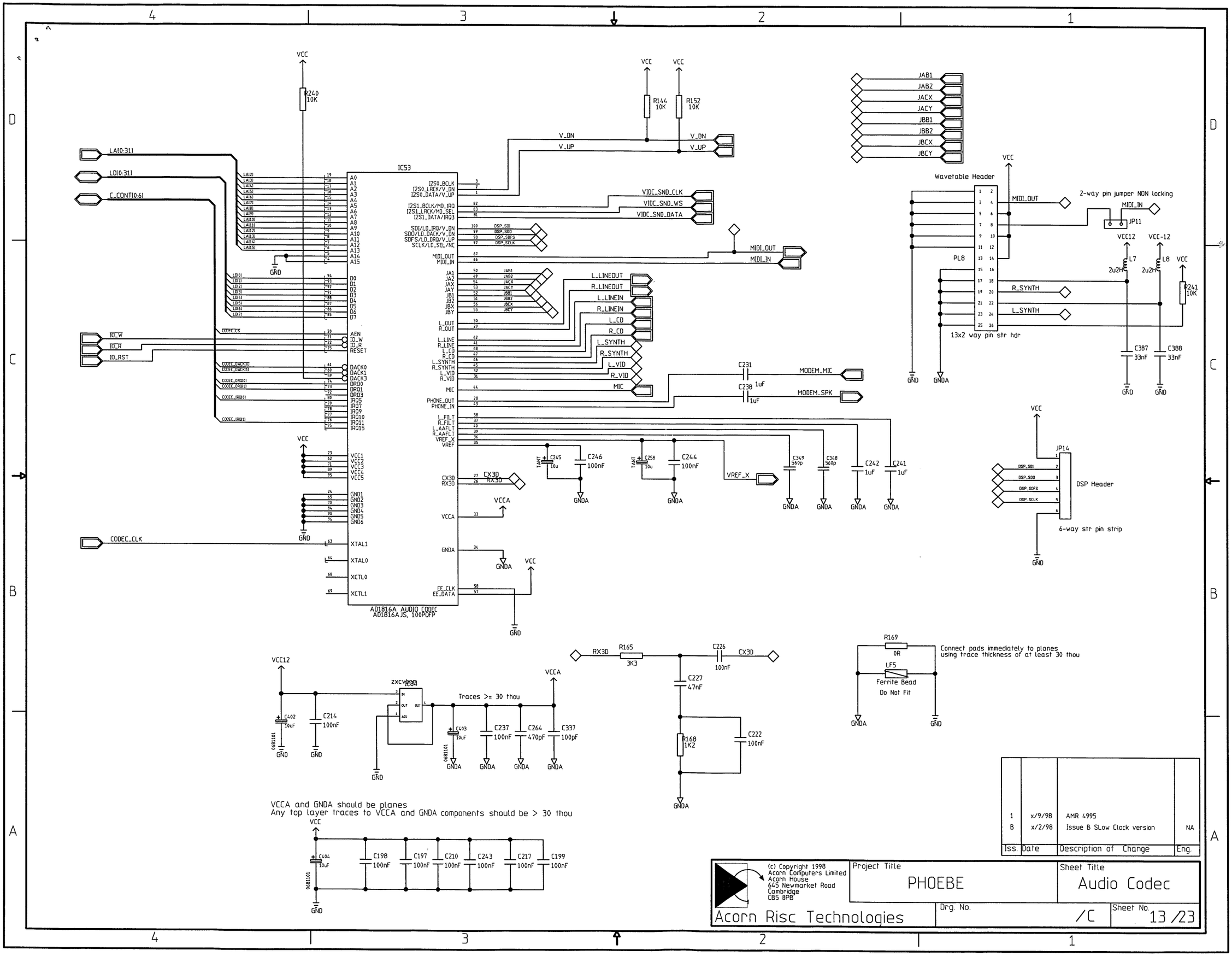

Iss.	Date	Description of Change	Eng.
1	x/9/98	AMR 4995	
B	x/2/98	Issue B SLow Clock version	NA

(c) Copyright 1998
Acorn Computers Limited
Acorn House
645 Newmarket Road
Cambridge
CB5 8PB

Acorn Risc Technologies

Project Title: PHOEBE

Sheet Title: Audio Codec

Drg. No. /C

Sheet No. 13 /23

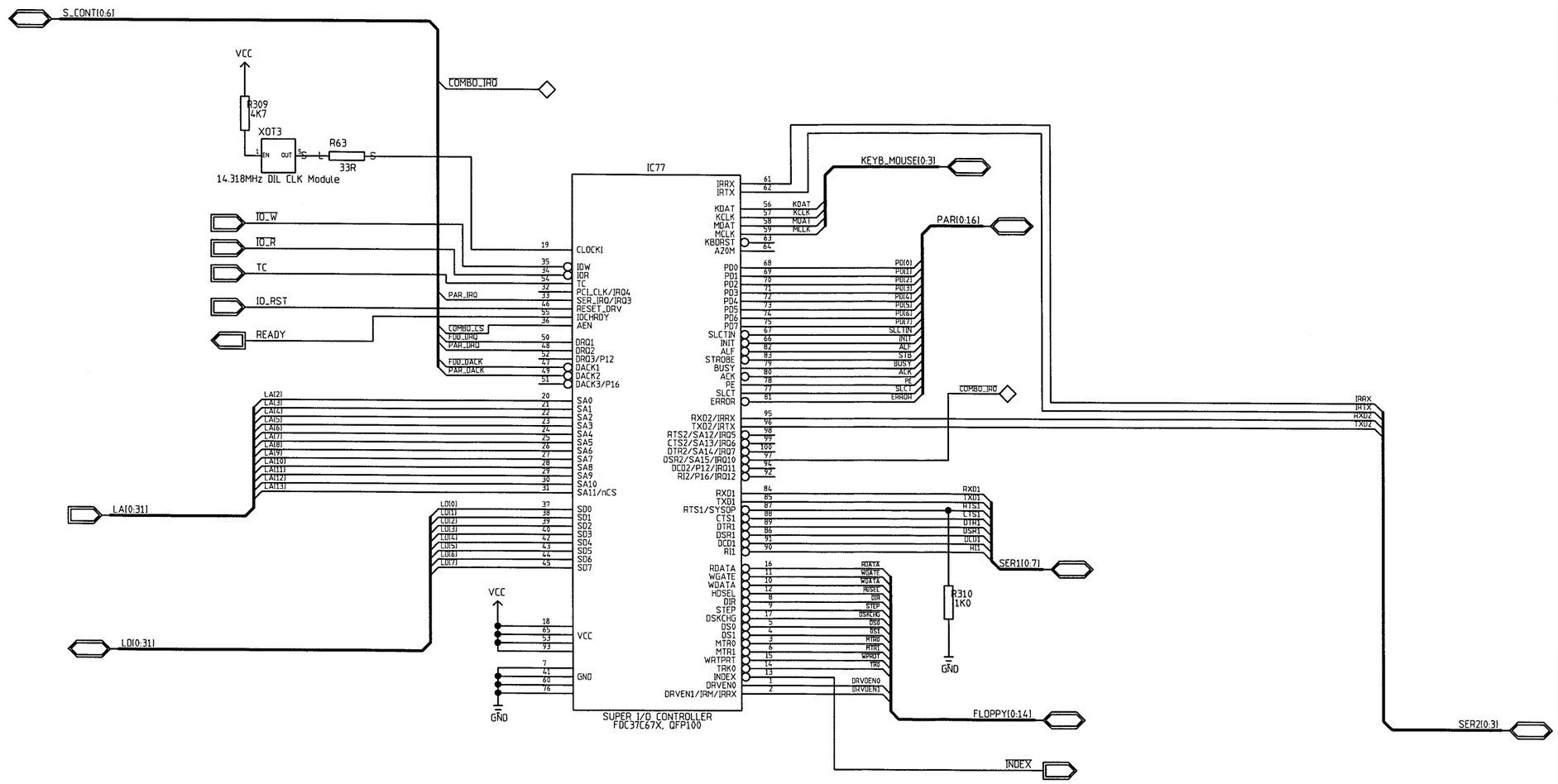

Iss.	Date	Description of Change	Eng.
1	x/9/98	AMR 4995	
B	x/2/98	Issue B SLow Clock version	NA
A	6/6/97	Release Initial	NA

(c) Copyright 1998
Acorn Computers Limited
Acorn House
645 Newmarket Road
Cambridge
CB5 8PB

Acorn Risc Technologies

Project Title: PHOEBE

Sheet Title: COMBO

Drg. No. 1209110/C

Sheet No. 14/23

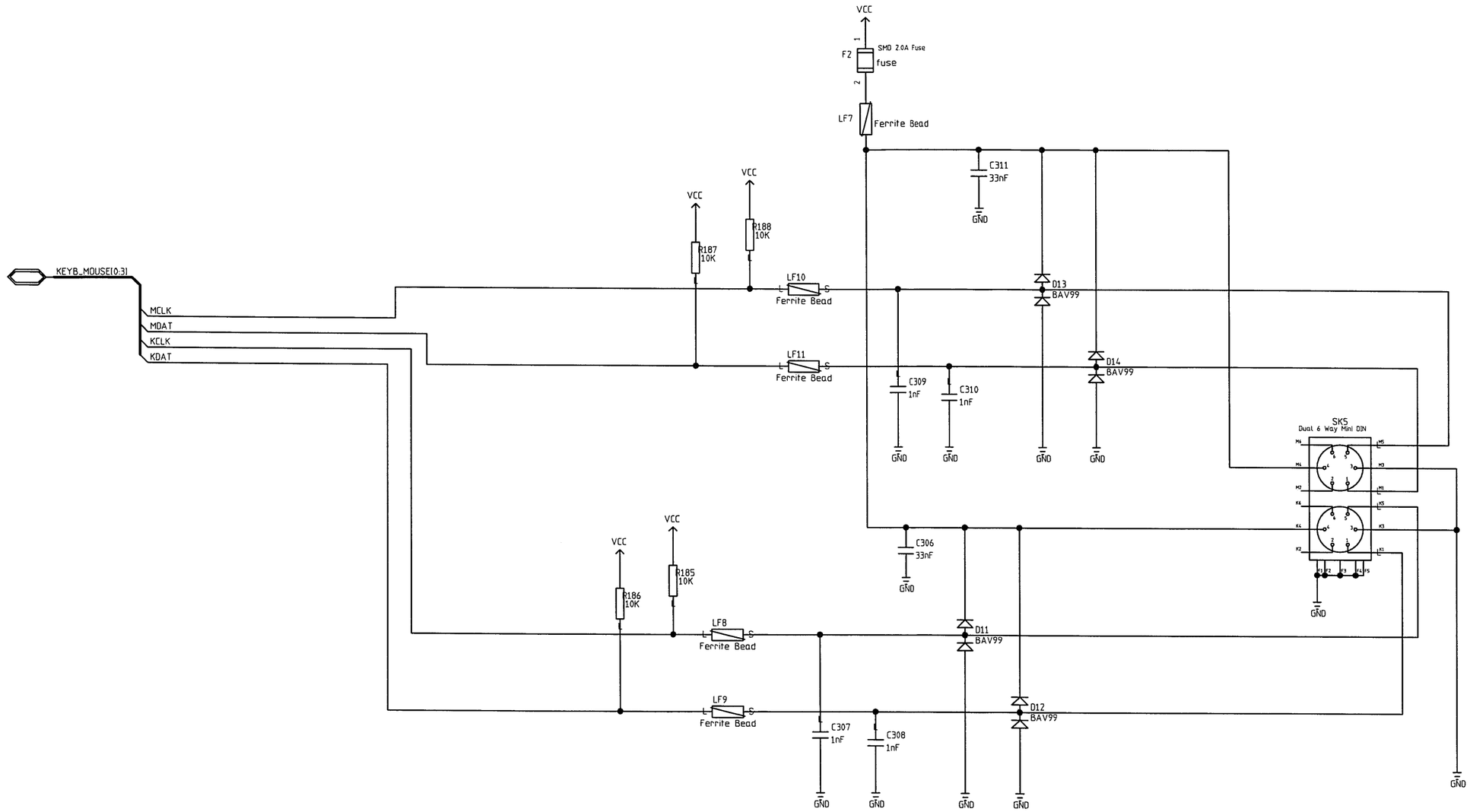

Iss.	Date	Description of Change	Eng.
1	x/9/98	AMR 4995	
B	x/2/98	Issue B SLow Clock version	NA
A	6/6/97	Initial Release	NA

(c) Copyright 1998
Acorn Computers Limited
Acorn House
645 Newmarket Road
Cambridge
CB5 8PB

Acorn Risc Technologies

Project Title: PHOEBE

Sheet Title: MOUSE & KEYBOARD

Drg. No. 1209110/C

Sheet No. 15/23

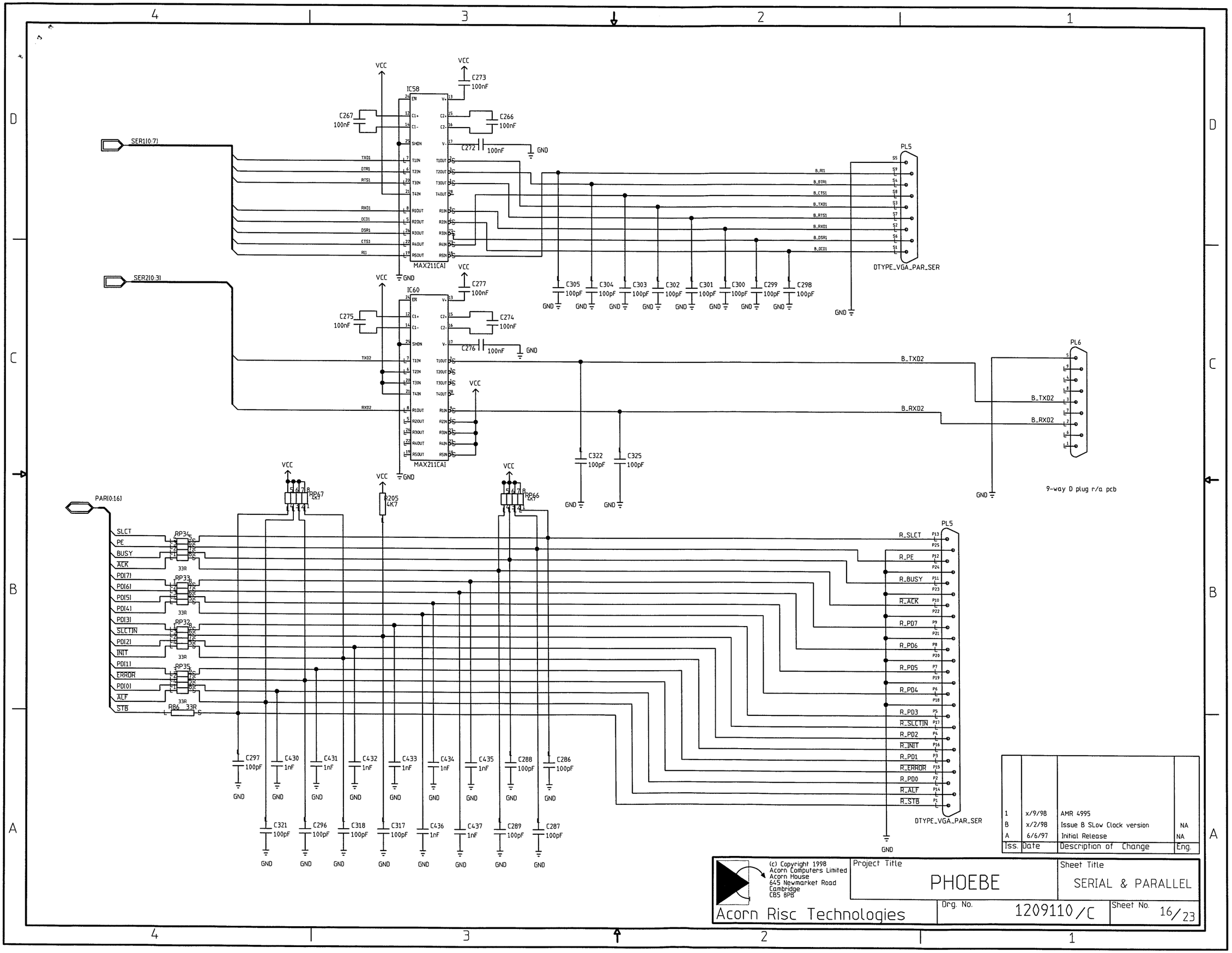

Iss.	Date	Description of Change	Eng.
1	x/9/98	AMR 4995	
B	x/2/98	Issue B SLow Clock version	NA
A	6/6/97	Initial Release	NA

(c) Copyright 1998
Acorn Computers Limited
Acorn House
645 Newmarket Road
Cambridge
CB5 8PB

Acorn Risc Technologies

Project Title: PHOEBE

Sheet Title: SERIAL & PARALLEL

Drg. No. 1209110/C

Sheet No. 16/23

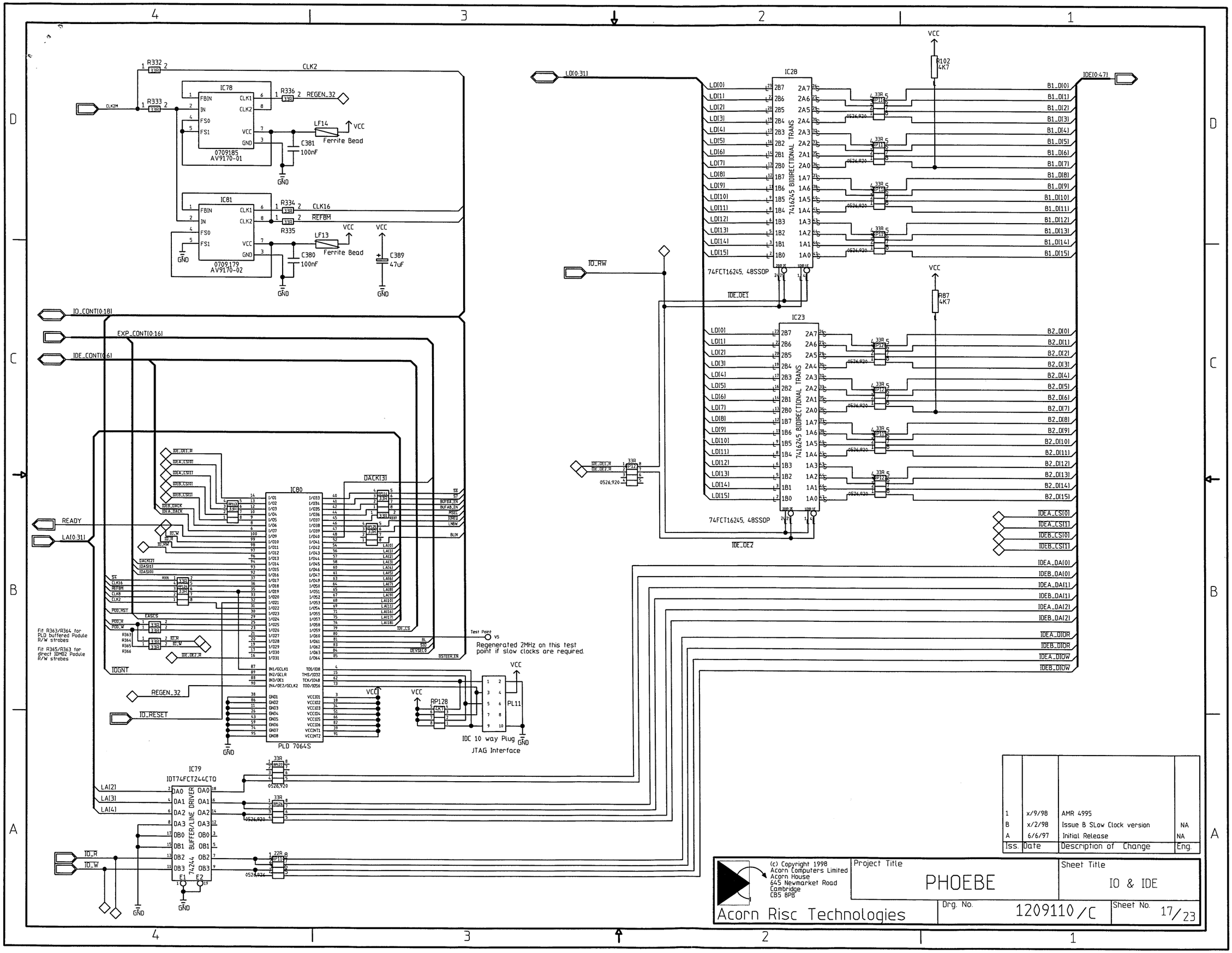

Iss.	Date	Description of Change	Eng.
1	x/9/98	AMR 4995	
B	x/2/98	Issue B SLow Clock version	NA
A	6/6/97	Initial Release	NA

(c) Copyright 1998
Acorn Computers Limited
Acorn House
645 Newmarket Road
Cambridge
CB5 8PB

Acorn Risc Technologies

Project Title: PHOEBE

Sheet Title: IO & IDE

Drg. No. 1209110/C

Sheet No. 17/23

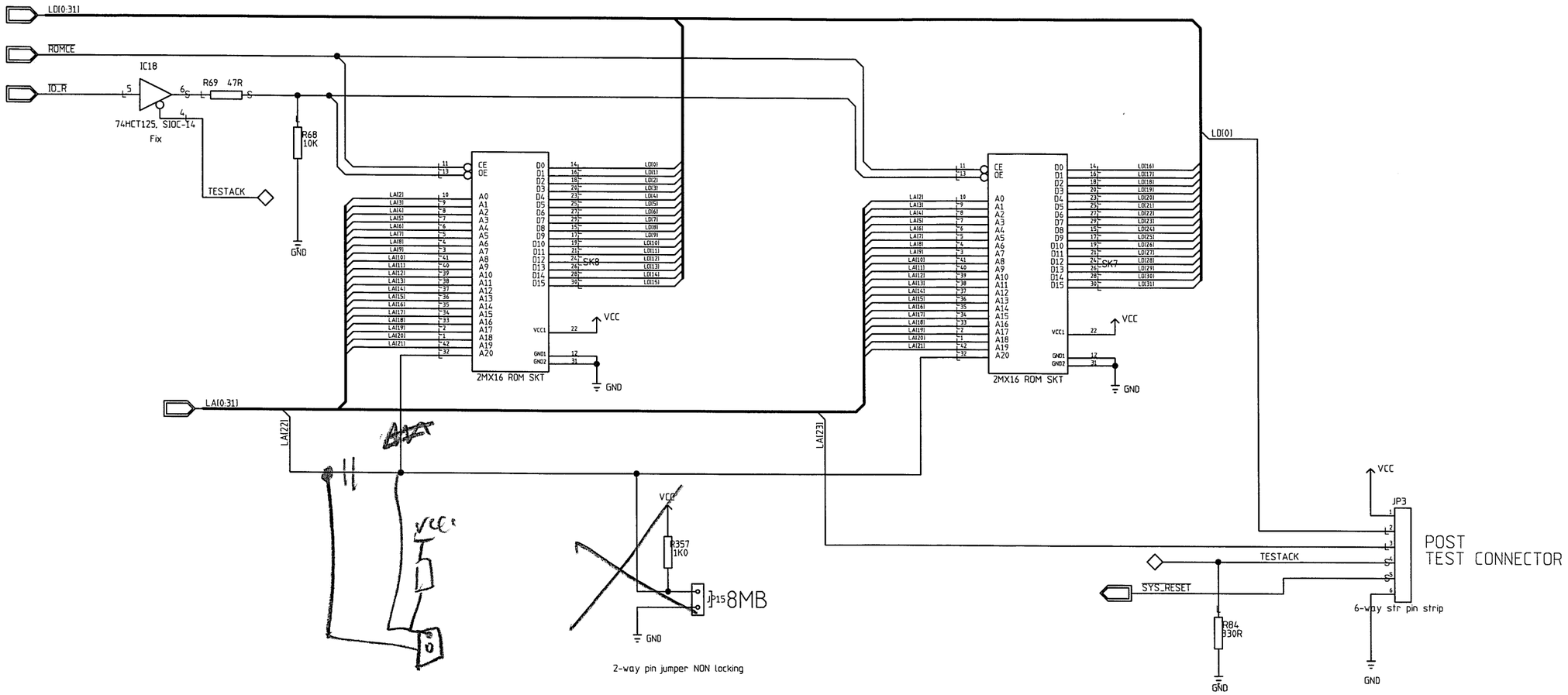

Iss.	Date	Description of Change	Eng.
1	x/9/98	AMR 4995	
B	x/2/98	Issue B SLow Clock version	NA
A	6/6/97	Initial Release	NA

(c) Copyright 1998
Acorn Computers Limited
Acorn House
645 Newmarket Road
Cambridge
CB5 8PB

Acorn Risc Technologies

Project Title: PHOEBE

Sheet Title: BOOT ROMS

Drg. No. 1209110/C

Sheet No. 18/23

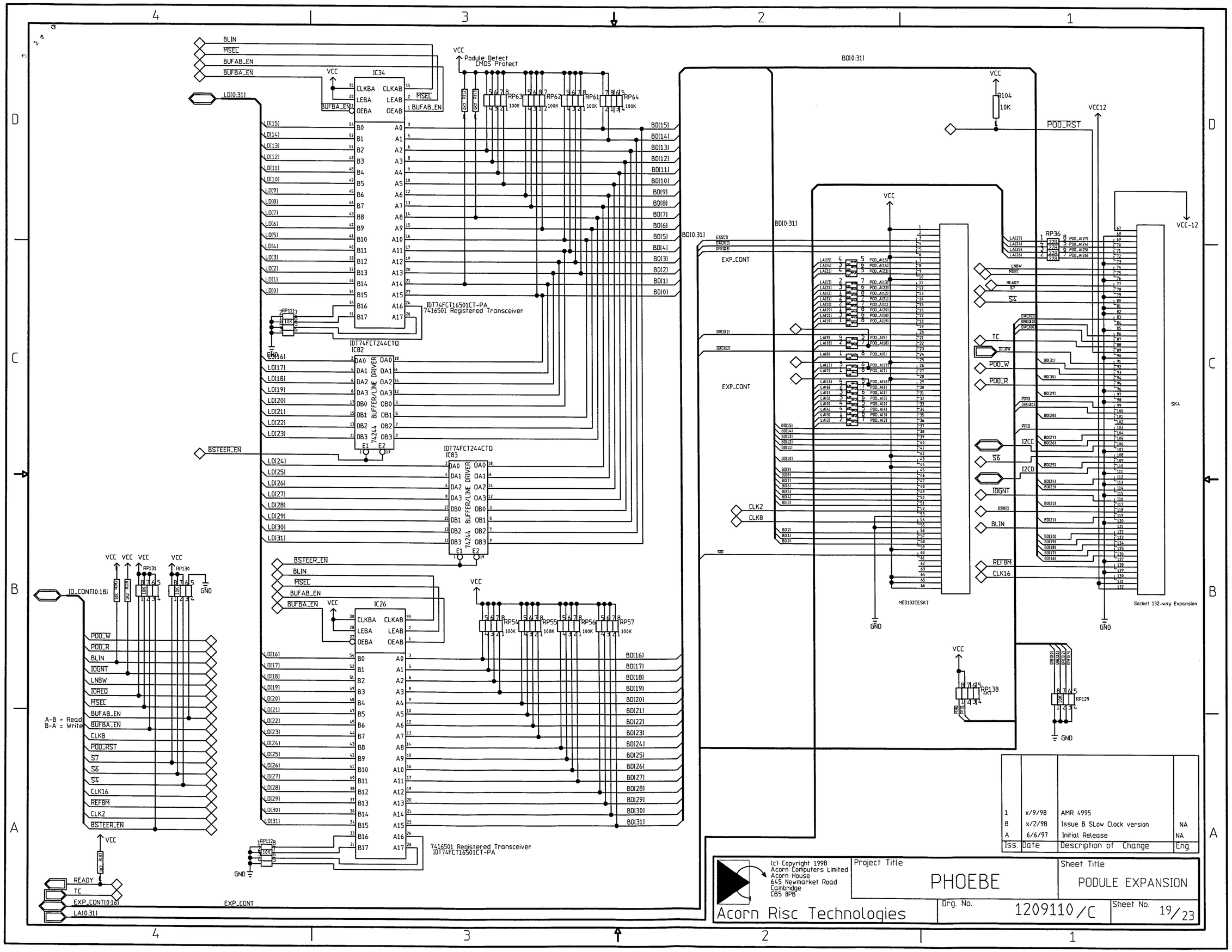

Iss.	Date	Description of Change	Eng.
1	x/9/98	AMR 4995	
B	x/2/98	Issue B SLow Clock version	NA
A	6/6/97	Initial Release	NA

(c) Copyright 1998
Acorn Computers Limited
Acorn House
645 Newmarket Road
Cambridge
CB5 8PB

Acorn Risc Technologies

Project Title: PHOEBE

Sheet Title: PODULE EXPANSION

Drg. No. 1209110/C

Sheet No. 19/23

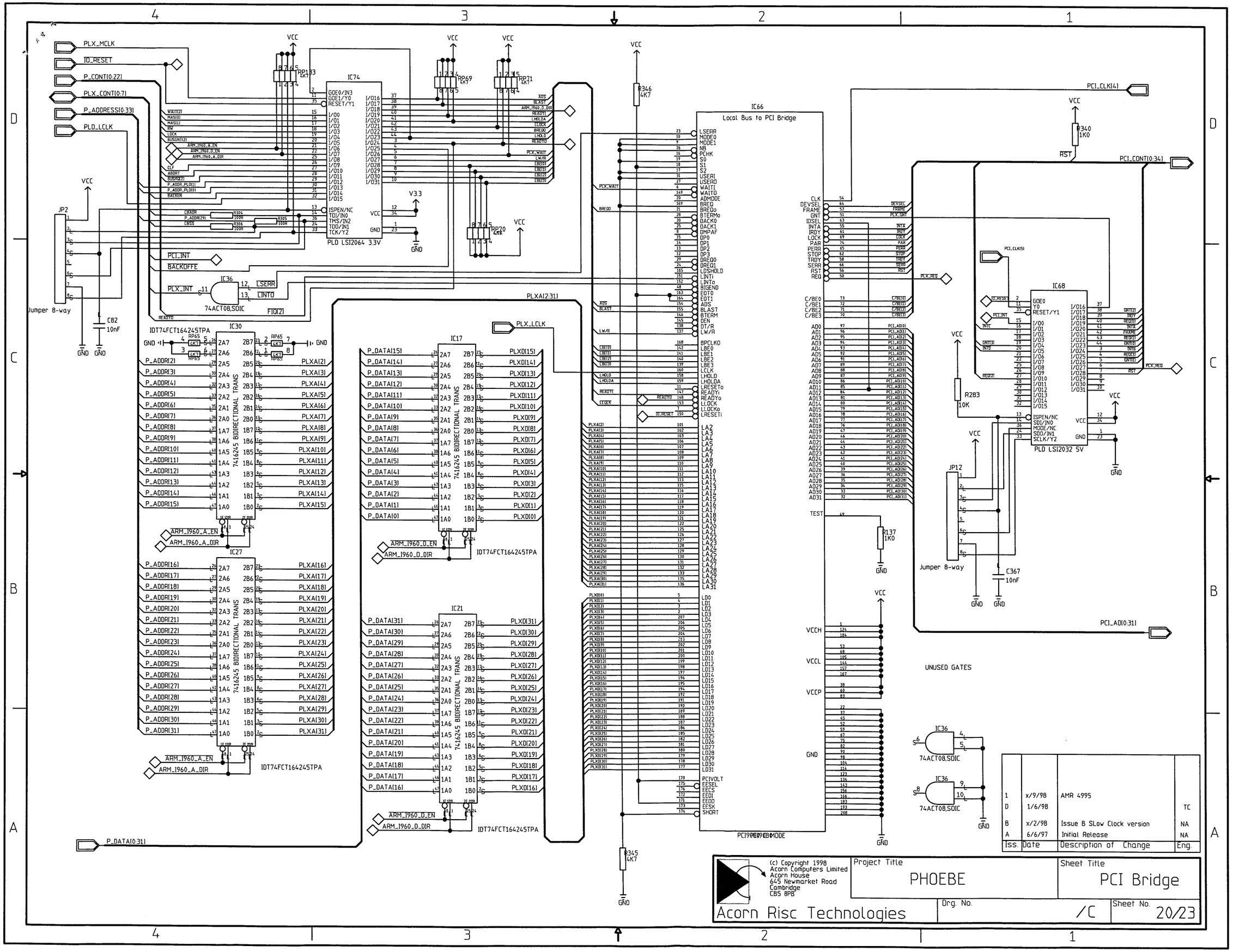
IC74
PLD LSI2064 3.3V
IC66
Local Bus to PCI Bridge
IC68
PLD LSI2032 5V
IC30
IC27
IC17
IC21
IDT74FCT164245TPA
74ACT08,SOIC
Jumper 8-way
JP2
JP12
PLX_MCLK
IO_RESET
P_CONT[0:22]
PLX_CONT[0:7]
P_ADDRESS[0:33]
PLD_LCLK
PCI_INT
BACKOFFE
PLX_INT
PLXA[2:31]
PLX_LCLK
P_DATA[0:31]
PCI_CLK[4]
PCI_CONT[0:34]
PCI_CLK[5]
PLX_REQ
PCI_AD[0:31]
UNUSED GATES
PCI1060/1080 MODE
(c) Copyright 1998
Acorn Computers Limited
Acorn House
645 Newmarket Road
Cambridge
CB5 8PB
Acorn Risc Technologies
Project Title
PHOEBE
Sheet Title
PCI Bridge
Drg. No.
/C
Sheet No.
20/23
Iss. | Date | Description of Change | Eng.
1 | x/9/98 | AMR 4995
D | 1/6/98 | TC
B | x/2/98 | Issue B SLow Clock version | NA
A | 6/6/97 | Initial Release | NA

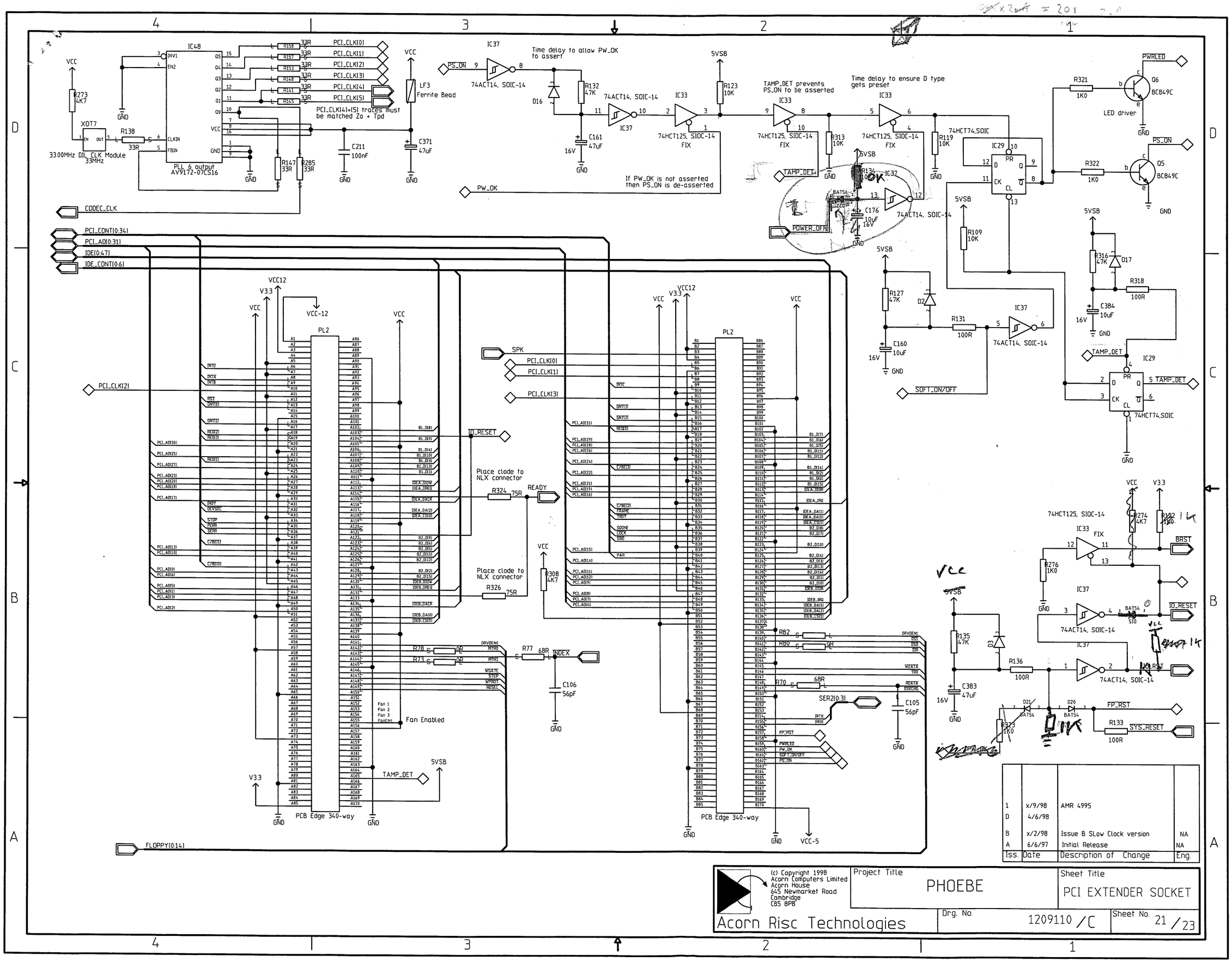

Iss.	Date	Description of Change	Eng.
1	x/9/98	AMR 4995	
D	4/6/98		
B	x/2/98	Issue B SLow Clock version	NA
A	6/6/97	Initial Release	NA

(c) Copyright 1998
Acorn Computers Limited
Acorn House
645 Newmarket Road
Cambridge
CB5 8PB

Acorn Risc Technologies

Project Title: PHOEBE

Sheet Title: PCI EXTENDER SOCKET

Drg. No. 1209110 /C

Sheet No. 21 /23

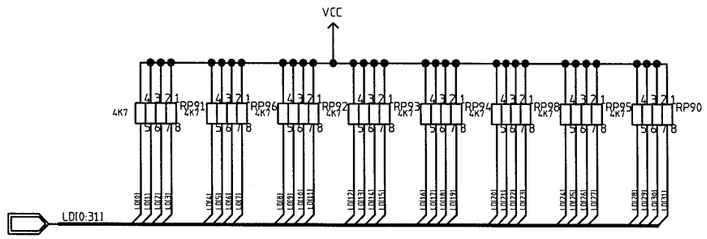

Iss.	Date	Description of Change	Eng.
1	x/9/98	AMR 4995	
D	x/6/98	Issue D Asic support	NA

(c) Copyright 1998
Acorn Computers Limited
Acorn House
645 Newmarket Road
Cambridge
CB5 8PB

Acorn Group

Project Title: PHOEBE

Sheet Title: TERMINATION (I/O)

Drg. No. 1209110/C

Sheet No. 22 / 23

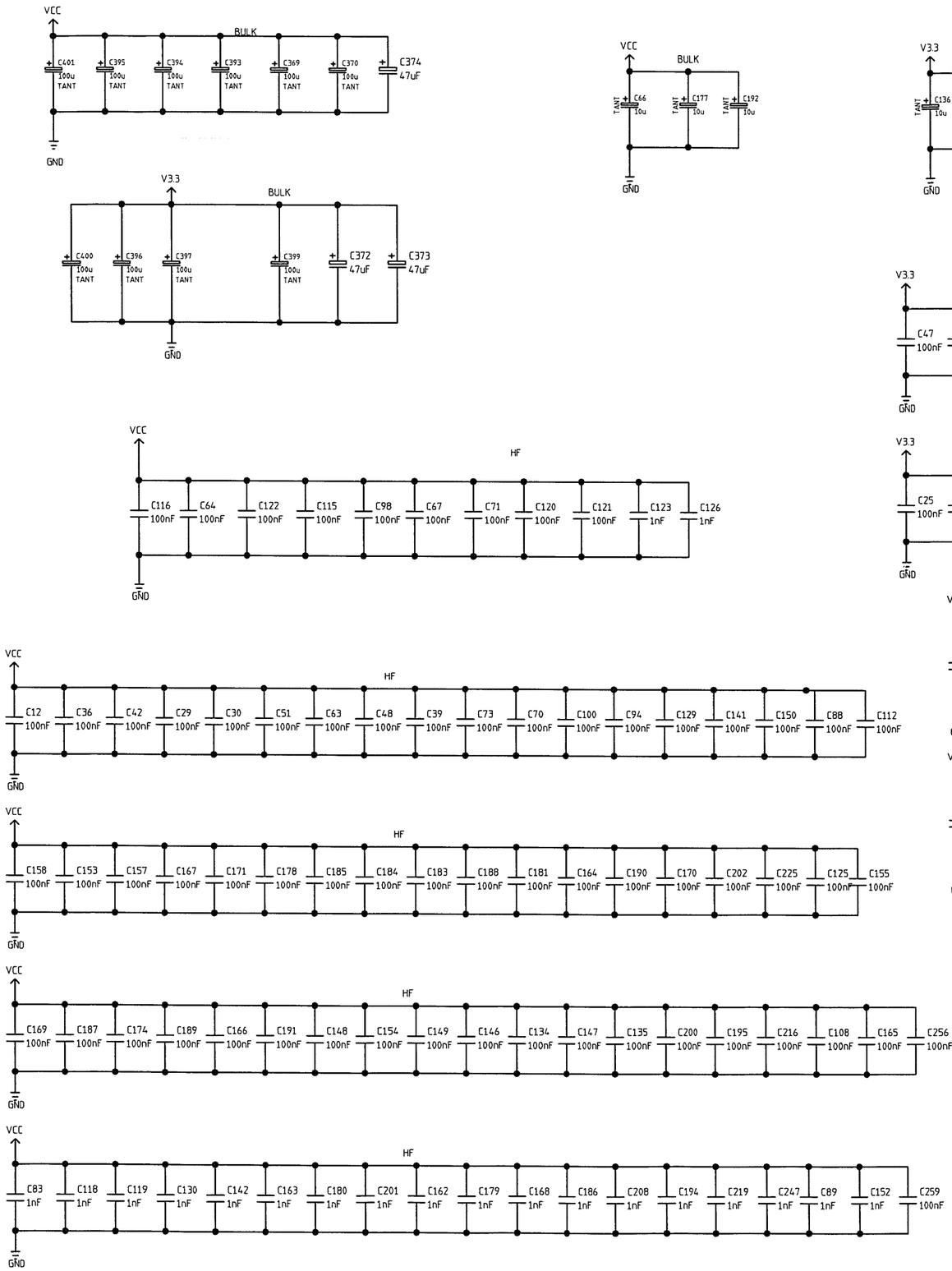

Iss.	Date	Description of Change	Eng.
1	x/9/98	AMR 4995	
B	x/2/98	Issue B SLow Clock version	NA
A	6/6/97	Initial Release	NA

(c) Copyright 1998
Acorn Computers Limited
Acorn House
645 Newmarket Road
Cambridge
CB5 8PB

Acorn Risc Technologies

Project Title: PHOEBE

Sheet Title: POWER & DECOUPLING

Drg. No. 1209110 /C

Sheet No. 23/23